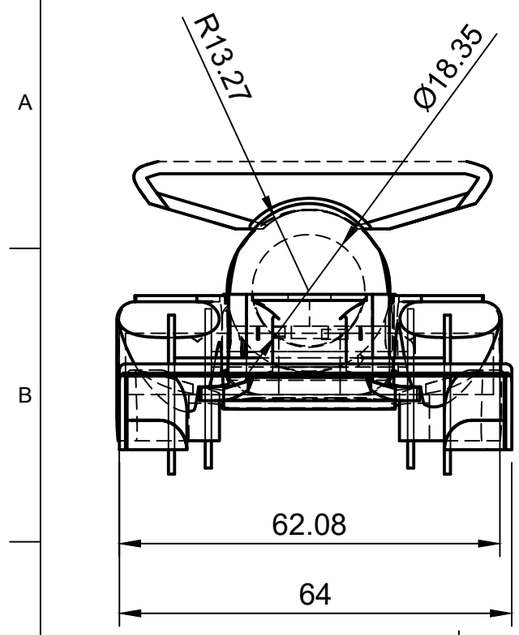

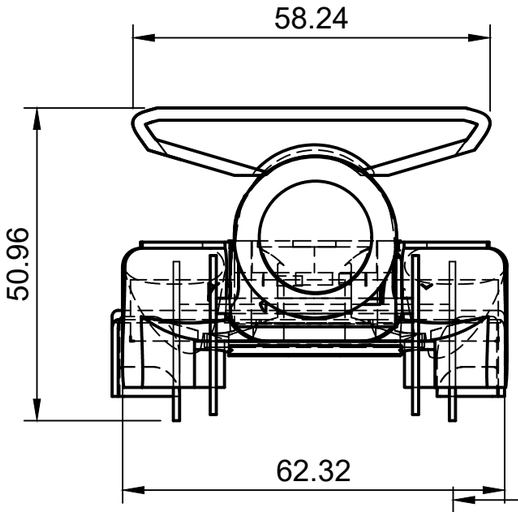

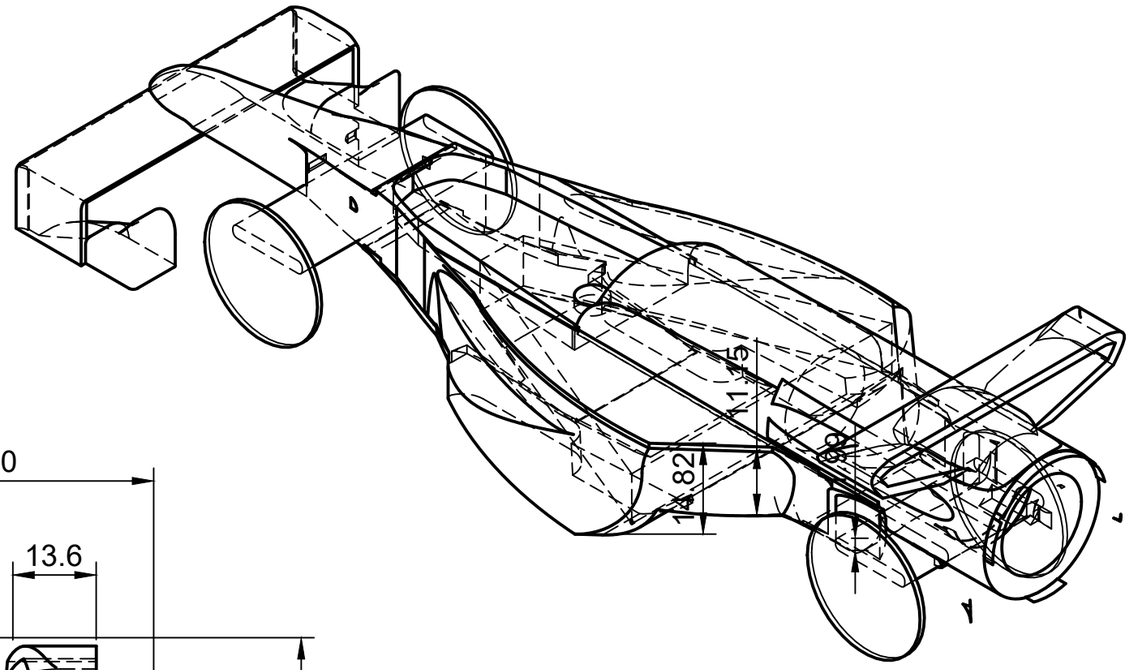

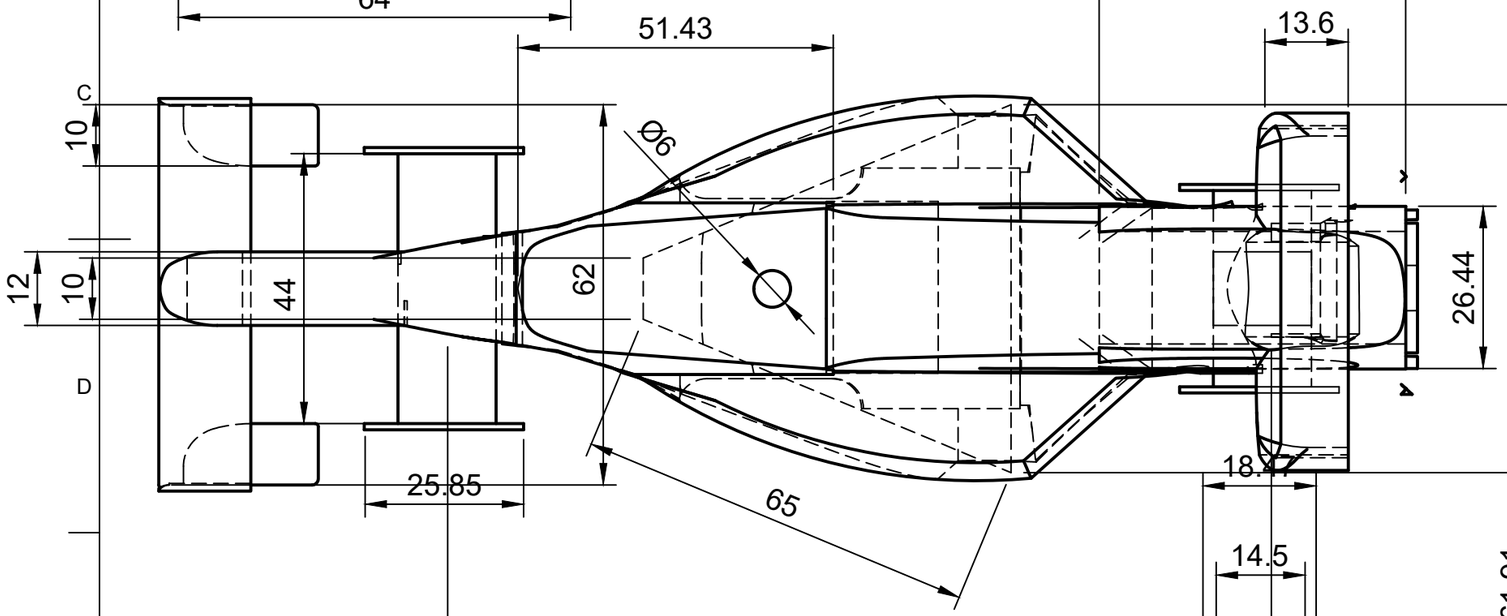

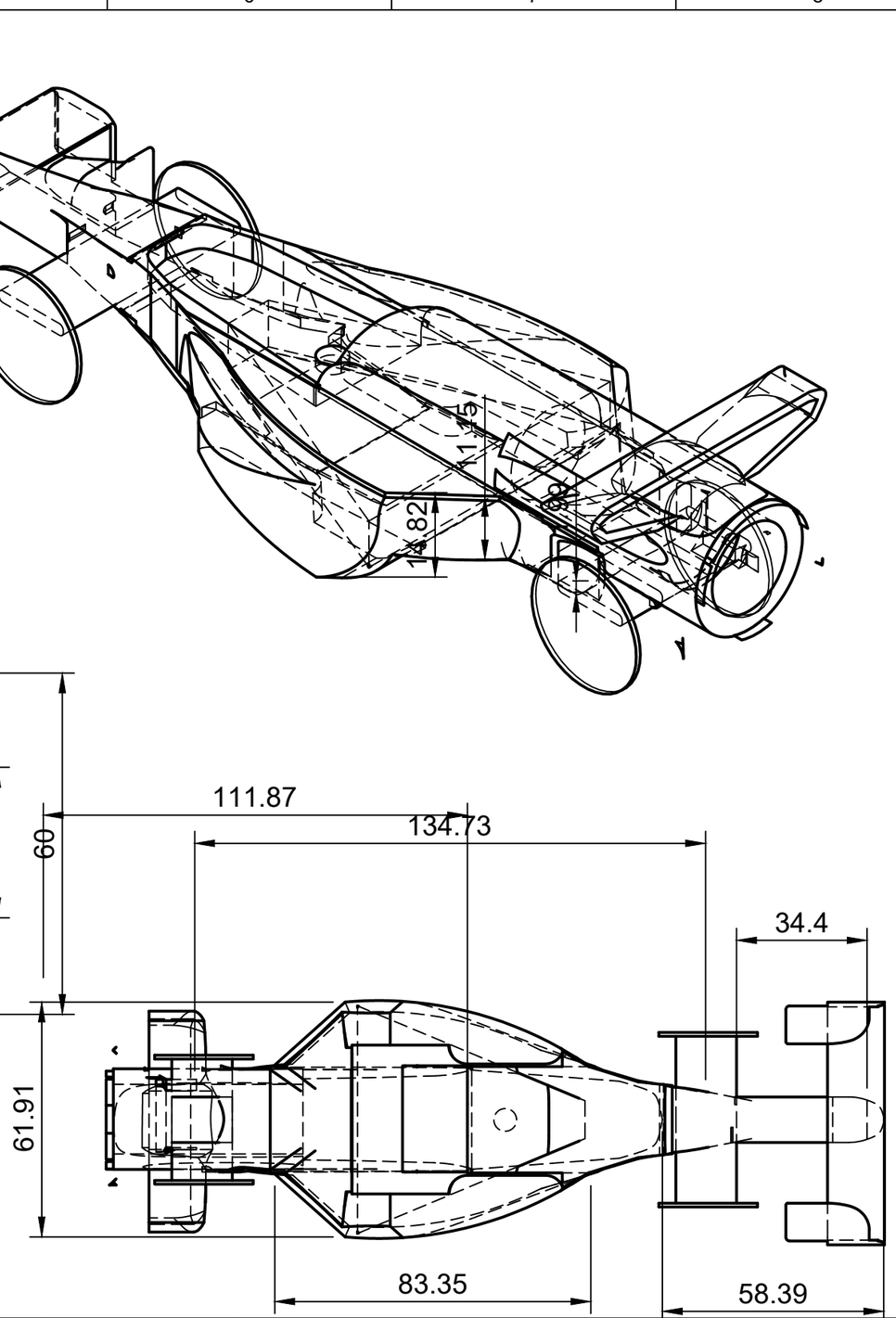

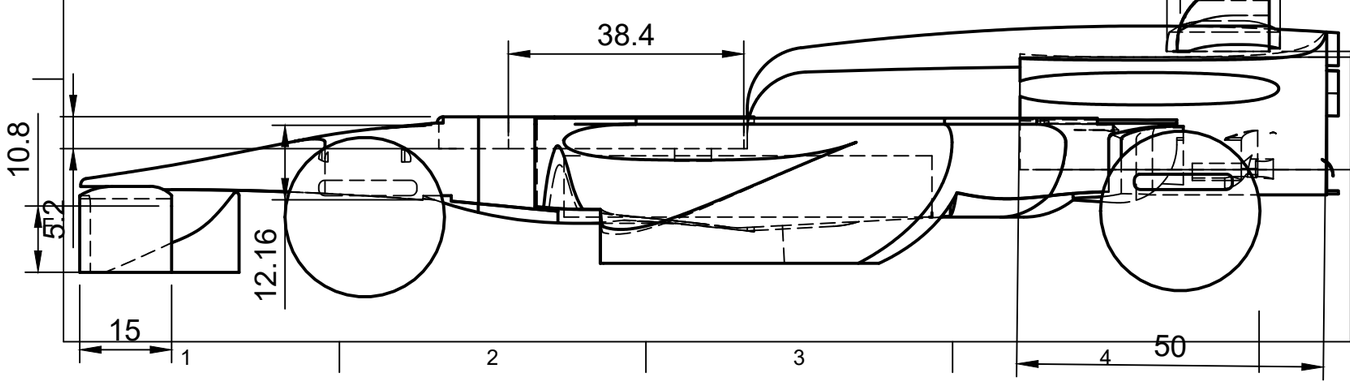

Dept.	Technical reference	Created by Eve Carruthers 24/11/2025	Approved by
		Document type Full Engineering Drawings	Document status Submission for Digital Jersey Ready
		Title EK3	DWG No. No #3
			Rev. / Date of issue: 24/11/2025 / Sheet: 1/1